**This lovely fireplace surround** can be built using the same basic procedures and techniques as the more complex project featured on pages 125 to 133.

## Project Variation:
# Easy Fireplace Mantel

If you're attracted to the idea of building your own fireplace mantel structure but don't have the time or experience to undertake something as complex as the beautiful surround featured in this chapter, here's a nice compromise. This easier-to-build fireplace mantel is well-stocked with charm, and the process for making it is quite similar to the step-by-step project outlined on the following pages.

This surround plan originally appeared in the official club magazine for *The Handyman Club of America.* It was built from solid red oak boards and moldings. If you're lucky, you'll find a board wide enough to make the broad top rail from a single piece of lumber. If you can only find narrow stock, it's a simple matter to glue up two or more boards to make up the required width. You also could substitute a piece of ¾-in. plywood.
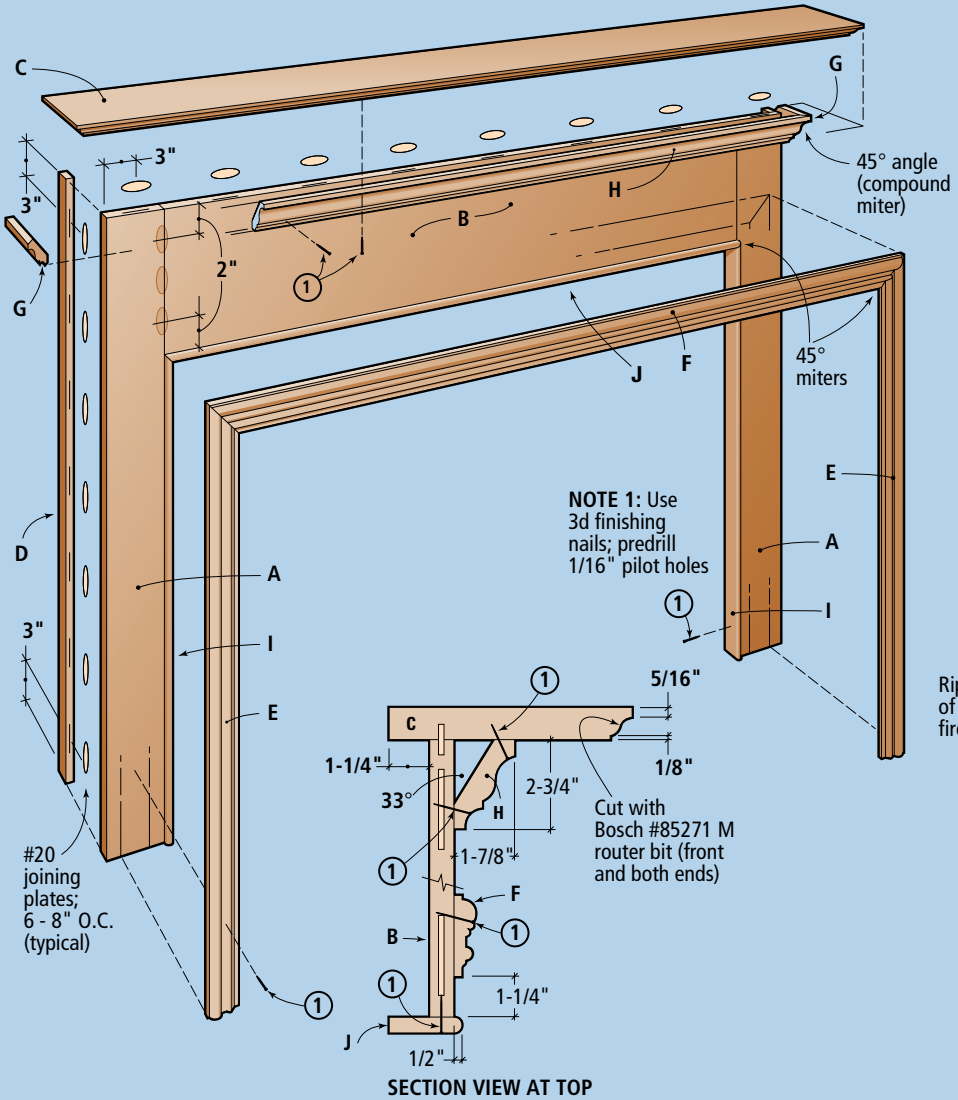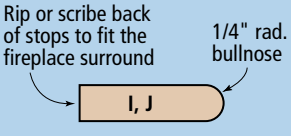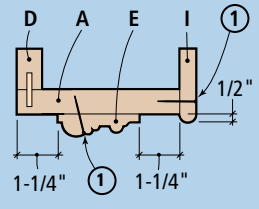
~ Project designed by *Neal Barrett*
~ Illustration created by *Gabriel Graphics*
~ Photograph by *Carl Weese*